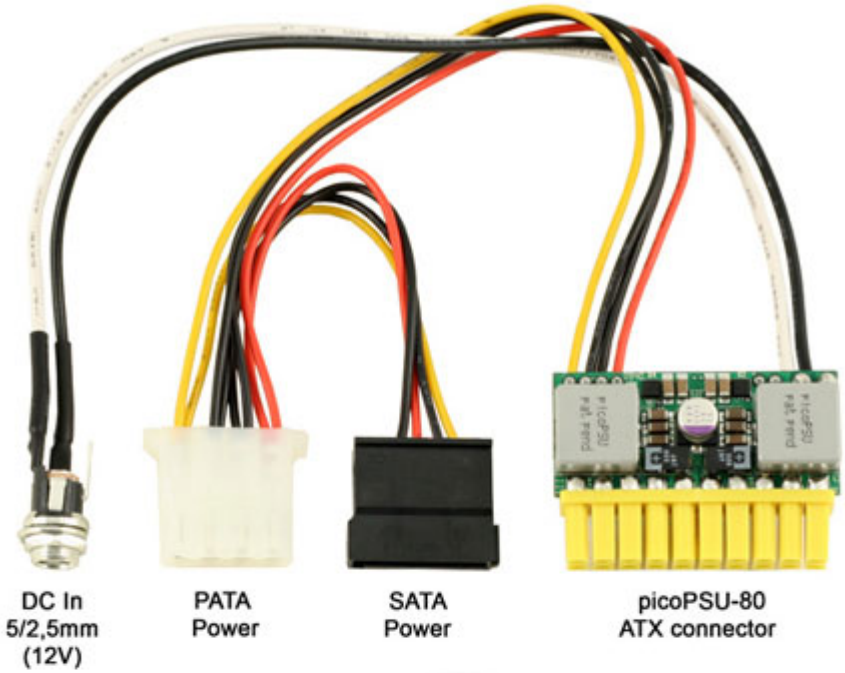

27.95 EUR
incl. 19% VAT, plus shipping

- Tiny size !!!
- Japan Codensators !
- 3 years warranty !
- Perfect for Mini-ITX !

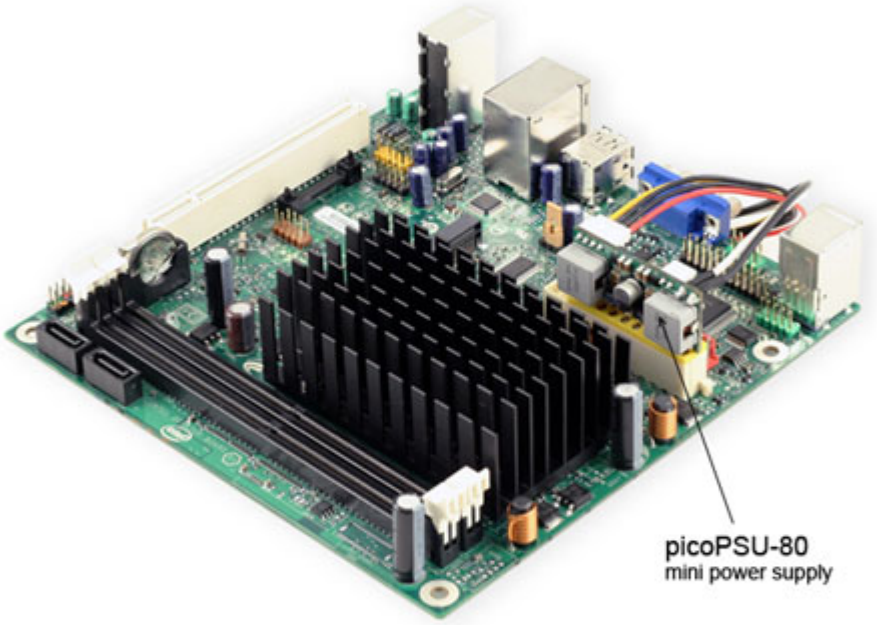

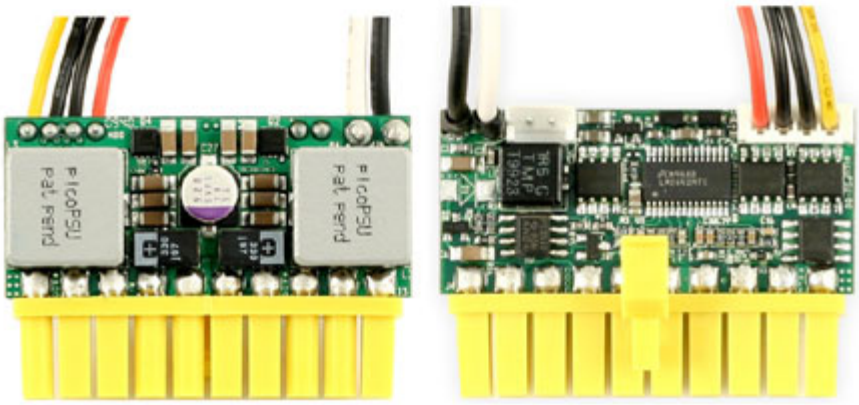

Support: Manual [EN] | Manual [DE]

- for Intel Atom ITX, Bay trail, ...
- for VIA mini-ITX boards with C3 or C7 processors, P3, P4, Pentium-M, and AMD processors.
- 80 watts

- Dimensions : 31 x 45 x 20 mm
- Power Input : 12VDC (11.5-13.0VDC)
- Long Life, Solid Polymer Caps (Made in Japan)

Introducing picoPSU-80, world's tiniest 12V DC-DC ATX power supply unit (PSU)

Compact design, less cables. The picoPSU-80 is the smallest snap-in 12V ATX dc-dc power supply. The picoPSU is compatible with an entire range of mini-itx motherboards as well as regular boards. The picoPSU-80 provides a cool, silent 80 Watts of power for small PC designs using a single 12V power source.

By using Patent Pending HyperWatt[TM] technologies , picoPSU-80 packs an impressive amount of power relative with its very small footprint. PicoPSU-80 has several key advantages over traditional power supplies:

- Very small, can build unltra-compact PC enclosures and slim server enclosures.
- Fits any motherboard equipped with a 20 or 24pin ATX connector.
- 100% silent, fanless, no moving parts.
- Operates at only 12V.
- Highly efficient design, does not produce a lot of heat.
- Ideal for low power Intel Core Duo as well as all VIA C3/C7 motherboards.

Small computer projects start with small power supplies. PicoPSU-80 is a crucial key component that unleashes the ultimate power solution for general purpose computing platforms. PicoPSU-80 is fully ATX compliant PSU, making it an excellent candidate for any silent, fanless and small 12V DC-DC ATX PC power supply project.

Reduce space. Eliminate 20 unnecessary wires by plugging in directly into the motherboard ATX connector. The picoPSU-80 12V dc-dc ATX converter was designed from ground up to fit small form factor ATX boards, allowing enclosure designers to save space while not compromising power requirements.

Cool power. Operating at only 12V, the picoPSU-80 dc-dc ATX power supply delivers 80 Watts of power. picoPSU provides plenty of power (via ATX connector and HDD cable harness) for CPU and an entire range of peripherals.

100% Silent The picoPSU-80 mini PSU is a 100% silent fanless dc to dc solution. No fans, no noise, just power for small and silent PCs.

picoPSU-80 is a fully compliant DC-DC ATX PC PSU. It can power VIA mini-ITX boards with C3 or C7 processors, P3, P4, Pentium-M, Core Duo Mobile or Desktop versions and llow power AMD processors.

picoPSU-80 ATX DC-DC converter is very small, measuring just 31x45x20mm, about the size of two AA batteries, picoPSU-80 is also 1U ServerRack compliant.

CE / FCC / VCCI Certifications: EN55024, EN55022 Class B (CE certification), Australia / New Zealand (using CISPR 22, EN55022), Japan (VCCI: using CISPR 22, ANSI C63.4), United States (FCC Part 15, Subpart B, Class B), Canada (ICES-003 using CISPR 22, ANSI C63.4).

3 years warranty
For picoPSU power supplies CarTFT.com e.K. grants you a 3 year warranty throughout the European Union from the date of purchase. During this period we will remedy any claim for warranty, either by repair or replacement. The warranty granted is in addition to the statutory rights and does not affect them. The warranty does not cover damage caused by improper use, normal wear and tear, exposure to chemicals or force majeure, or any intervention or repair by you or third parties. In case of warranty please send the defective device with a copy of the proof of purchase and a description of the fault sufficiently franked to CarTFT.com e.K., Hauffstrasse 7, D-72762 Reutlingen. Claims other than the right to remedy the defects in the product specified in these warranty conditions are not substantiated by this warranty. Warranty service does not extend or revise the product warranty period.

Connectors	1x 5.25" connector, 1x SATA	**Dimensions**	31 x 45 x 20 mm (1U)
DC-connector	2,5 x 5,5 x 10 mm	**Operating temperature**	- 20° C to + 85° C
Weight	57 g (27g without cables)	**Efficiency**	95%
5V	6A Max Load 7A Peak Load	**5VSV**	1.5A Max Load 2A Peak Load
3.3V	5A Max Load 7A Peak Load	**12V**	4A Max Load 7A Peak Load
Max Load	120W	**-12V**	0.05A Max Load 0.1A Peak Load
Scope of supply:	- picoPSU-80 ATX power supply		

(12V AC/DC Adapter not included ! Available in our shop)
eg. 84W adapter (230V AC)